Fiber-Fab®

World Class Tubs & Showers

Submittal Sheet

Models 48H1FWA, H2FWA, BFFWA Barrier-Free Shower

Date: _____ Job Name: _____

Customer: _____ Bid #: _____

Modifications: _____ Quantity: _____

Color	White
Ext. Dim.	48" W x 37½" D x 79¼" H
Warranty	10 Year Limited Warranty
Weight	150 Lbs. ± 10 Lbs
Material	Gelcoat

STANDARD FEATURES

1. One-piece construction allows for easy installation
2. Sandwich-Wall Construction
3. Sanitary Ware Gel Coat
4. Anti-slip floor provides added safety (meets ASTM -462)
6. Clear floor space is 45" x 34⅜"

OPTIONAL FEATURES

- Low Profile bottom
- ~~Pre-installed through-bolted curtain rod~~
- ~~Pre-installed through-bolted flangeless grab bar(s)~~
- ~~Pre-installed four-legged fold-down seat~~
- ~~Barrier-free ramps~~
- ~~Barrier-free splash guard~~
- ~~Stainless steel recessed soap dish~~

Model 48H1FWA

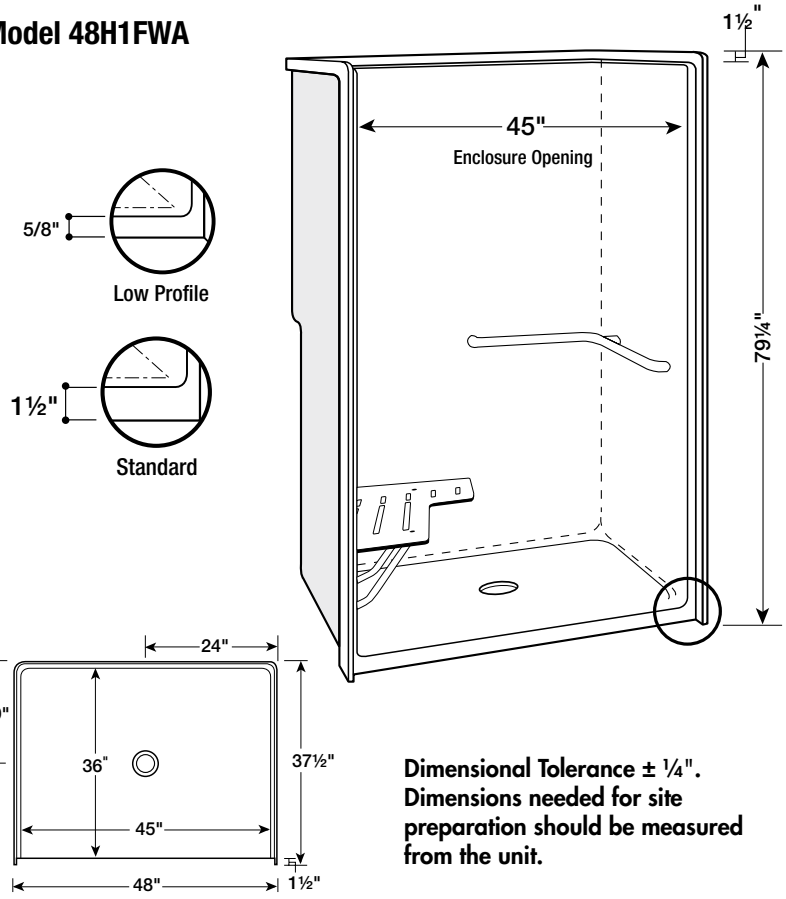

Dimensional Tolerance ± ¼". Dimensions needed for site preparation should be measured from the unit.

Model 48H1FWA: Features a fold-down seat with phenolic seat and stainless steel support tubing, as well as a 1¼" diameter "L" shaped stainless steel grab bar. Please specify Left- or Right-hand plumbing.

Model 48H2FWA: Includes a full wrap-around 1¼" diameter stainless steel grab bar.

Model 48BFFWA: Is a barrier-free shower stall without bar or seat option.

Low Profile Option: This option brings the threshold height on the model 48" transfer shower to ½" after the installation of flooring. **However, a 8"x 8" area must be blocked out around the drain to allow the drain to sit below the subfloor.**

Plumbing Contractor Approval	Date	General Contractor Approval	Date
Engineer Approval	Date	Architect Approval	Date

12657 Portland Road NE • P.O. Box 78 Gervais, Oregon 97026-0078 • Phone: (503) 792-3456 • 1-877-792-3456 • Fax: (503) 792-3603
E-mail: ffi@fiberfab.com • www.fiberfab.com • Monday - Friday from 8:00 am to 4:30 pm

Removable Threshold

(Model #RT-WH)

Fiberfab ERT Removable Threshold

Fiber-Fab INC. SINCE 1957
12657 Portland Rd NE
P O Box 78
Gervais, OR 97026-0078
Ph: 503/792-3456 Fax: 503/792-3603

Length is custom cut by factory to fit shower stall.

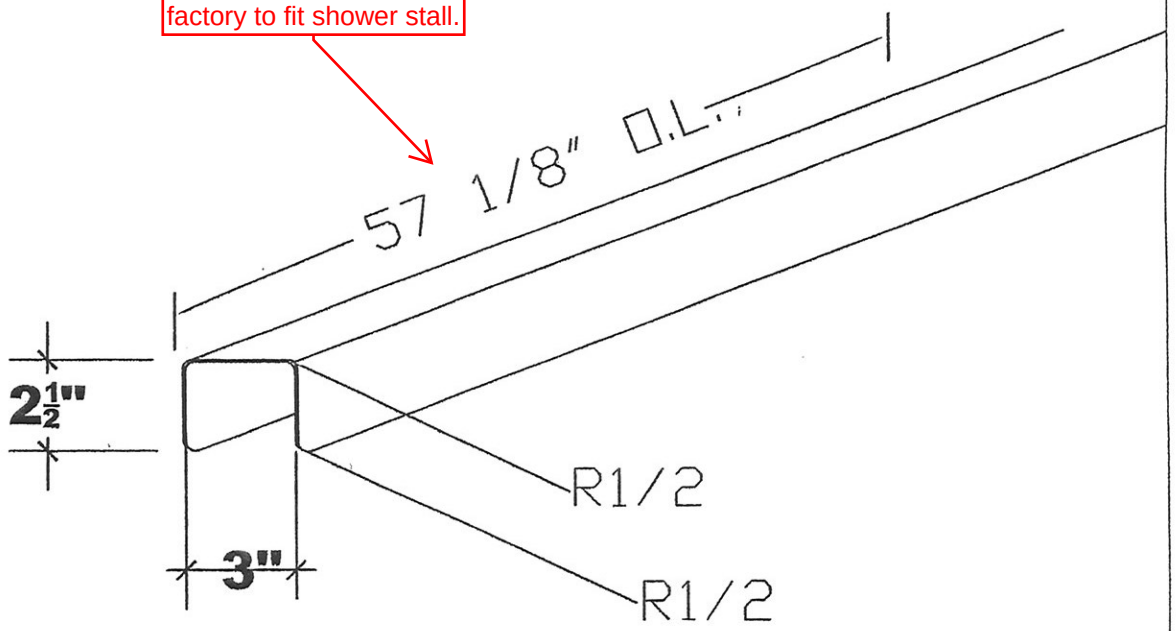

Dimensions shown are the dimensions of the Removable Threshold only. The actual threshold height will be determined by the Removable Threshold and the threshold of the shower stall.

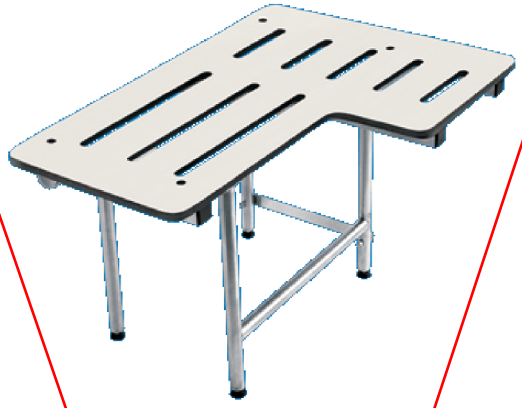

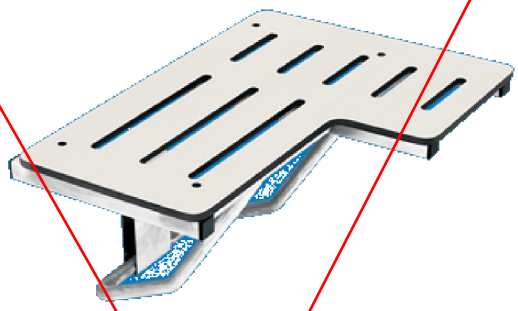

▲ Top of page

Symmons Valves

Temptrol 2000 pressure-balancing mixing valve with built-in choke and adjustable stop screw to limit handle turn and integral service stops.

H703PH Folding Shower Seat

Frame is stainless steel Type 304, 1"x18 gauge satin finish. Legs angle into base of wall for rigid support. When not in use, seat folds up against wall to conserve space and thumb screw holds it in place. Seat measures 18" long and projects 15½" from wall.

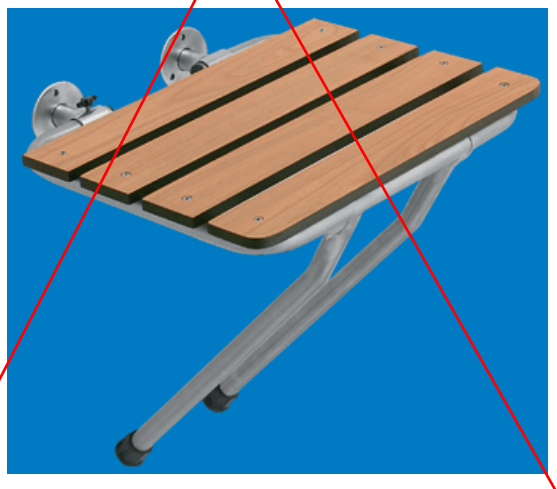

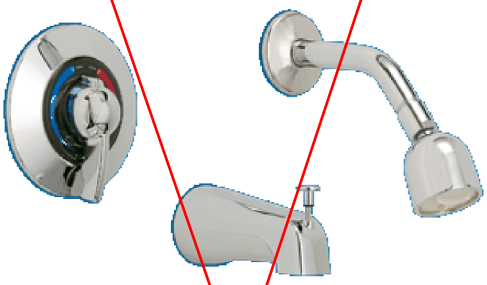

Tub/Shower VS252X

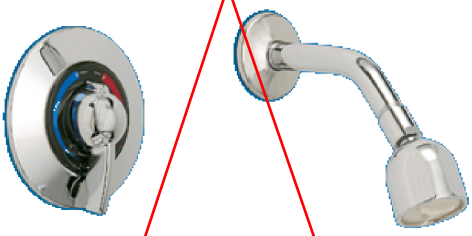

Shower VS251X

Removable Threshold Model ERT

This threshold can be field installed in our Assisted Living Models #38, 60 and 63 to help retain water. When shower needs to be converted to an ADA compliant shower, the threshold can be easily removed. Available in Satin Stainless Steel, Polished Stainless Steel or White Powder Coat. Splashguard not included.

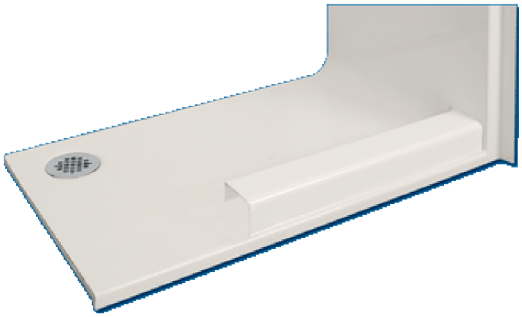

▲ Top of page

Grab Bars

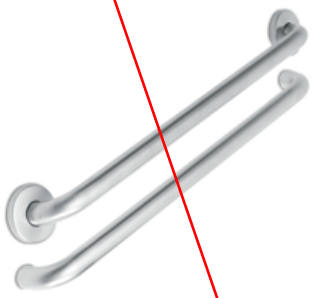

Standard Lengths:

12" (305mm)	36" (914mm)
16" (406mm)	40" (1016mm)
18" (457mm)	42" (1067mm)
24" (610mm)	48" (1219mm)

Straight Bars
This bar can be mounted horizontally, vertically or diagonally for use individually or in combination with other grab bars. All bars are 11/4" in diameter with concealed screw flanges and are 18 gauge. Additional bar configurations, finishes and coatings are available by special order.

Field Installation of Grab Bars
Installing grab bars in existing Fiber-Fab bathtubs and showers does not require additional backing. Because Fiber-Fab's units have an extremely high content of resin and fiberglass and low filler content, the strength and rigidity needed to support the mounting of grab bars are inherent to the product (Fiber-

Shower Drain V140NC-##

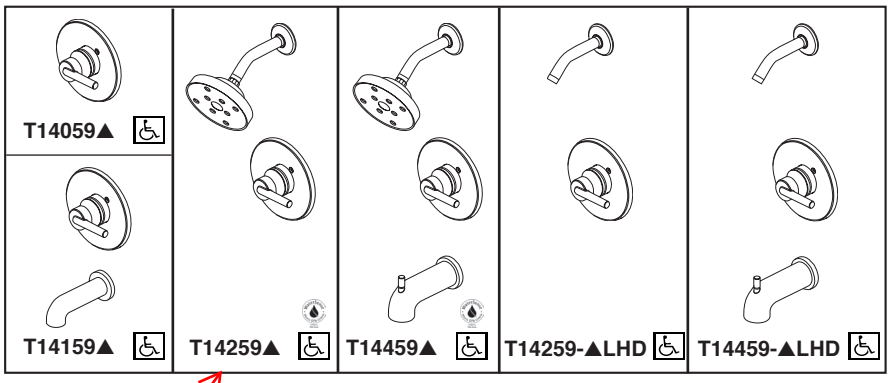

Submitted Model No.:

Specific Features:

Delta RP70175-15 will be provided, 1.5gpm. See attached.

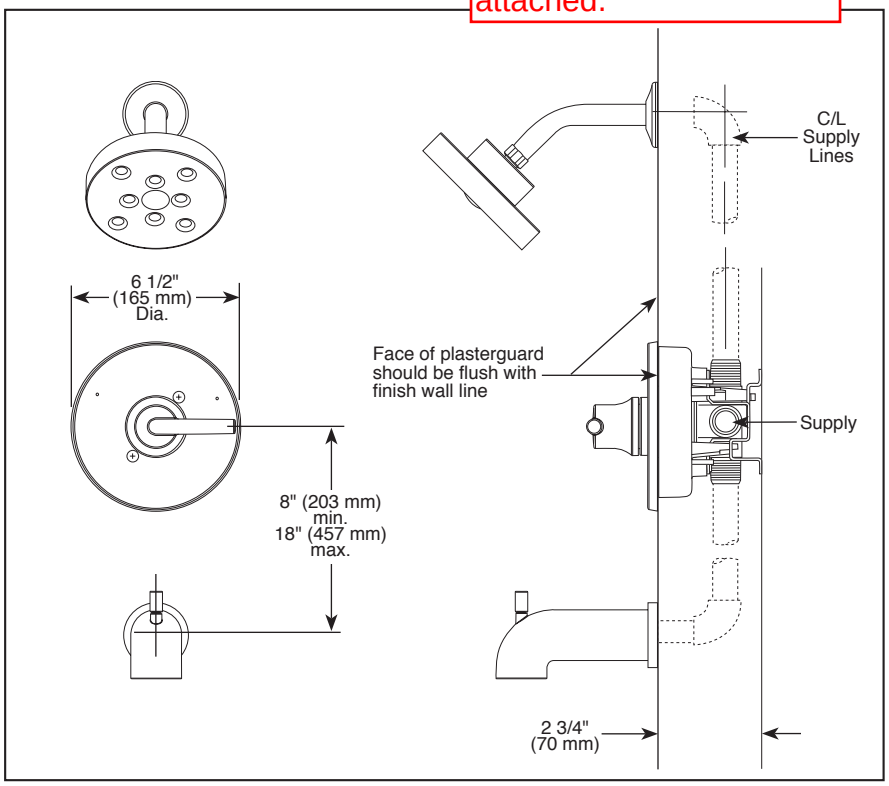

▲ Designate Proper Finish Suffix

RP70175▲ H_2O Showerhead

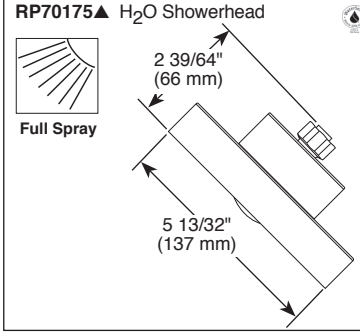

RP73371▲ Pull-Up Diverter

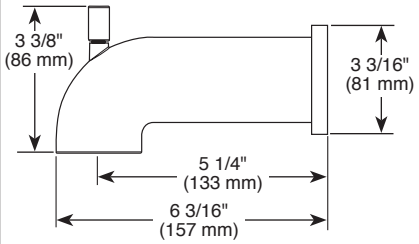

RP77350▲ No Diverter

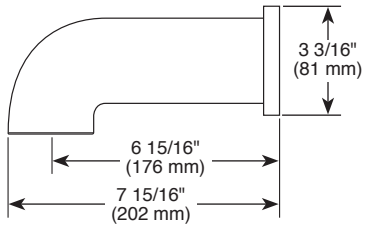

Delta reserves the right (1) to make changes in specifications and materials, and (2) to change or discontinue models, both without notice or obligation. Dimensions are for reference only. See current full-line price book or www.deltafaucet.com for finish options and product availability.

DSP-B-T14059 Rev. F

TUB AND SHOWER FAUCET TRIM

- Trinsic® Bath Collection
- Valve Only (T14059)
- Tub Only (T14159)
- Shower Only (T14259)
- Tub/Shower (T14459)

STANDARD SPECIFICATIONS:

- Pressure balanced single handle bath mixing valve trim
- Temperature only controlled with handle
- Field adjustable means to limit handle rotation into hot water zone
- 120° maximum handle rotation
- All parts replaceable from the front of the valve
- For use with MultiChoice® Universal rough valve body (R10000 Series)
- Lever handle
- ~~Single function H_2Okinetic Technology® showerhead; 2.0 gpm @ 80 PSI~~
- Maintains a balanced pressure of hot and cold water even when a valve is turned on or off elsewhere in the system
- Red/blue pad print temperature indicators on escutcheon
- "-LHD" models indicate less showerhead
- 1/2" CWT slip-on and spout adapter

WARRANTY

- Lifetime limited warranty on parts (other than electronic parts and batteries) and finishes: or, for commercial users, for 5 years from date of purchase.
- 5 year limited warranty on electronic parts (other than batteries); or, for commercial users, for 1 year from the date of purchase. No warranty is provided on batteries.

COMPLIES WITH:

- ASME A112.18.1 / CSA B125.1
- ASSE 1016
- Indicates compliance to ICC/ANSI A117.1 (valve control only)
- EPA WaterSense®

55 E 111th Street, Indianapolis, Indiana 46280
350 South Edgeware Road, St. Thomas, ON N5P 4L1

© 2015 Masco Corporation of Indiana

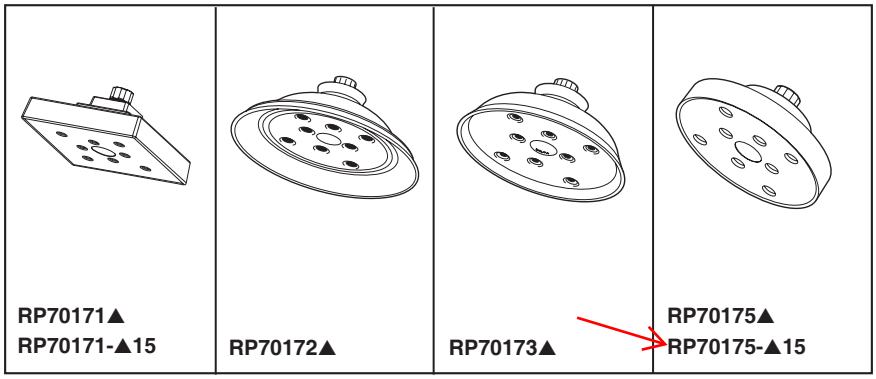

WATER EFFICIENT SHOWERHEADS

■ H_2Okinetic Technology®

Submitted Model No.: _____

Specific Features: _____

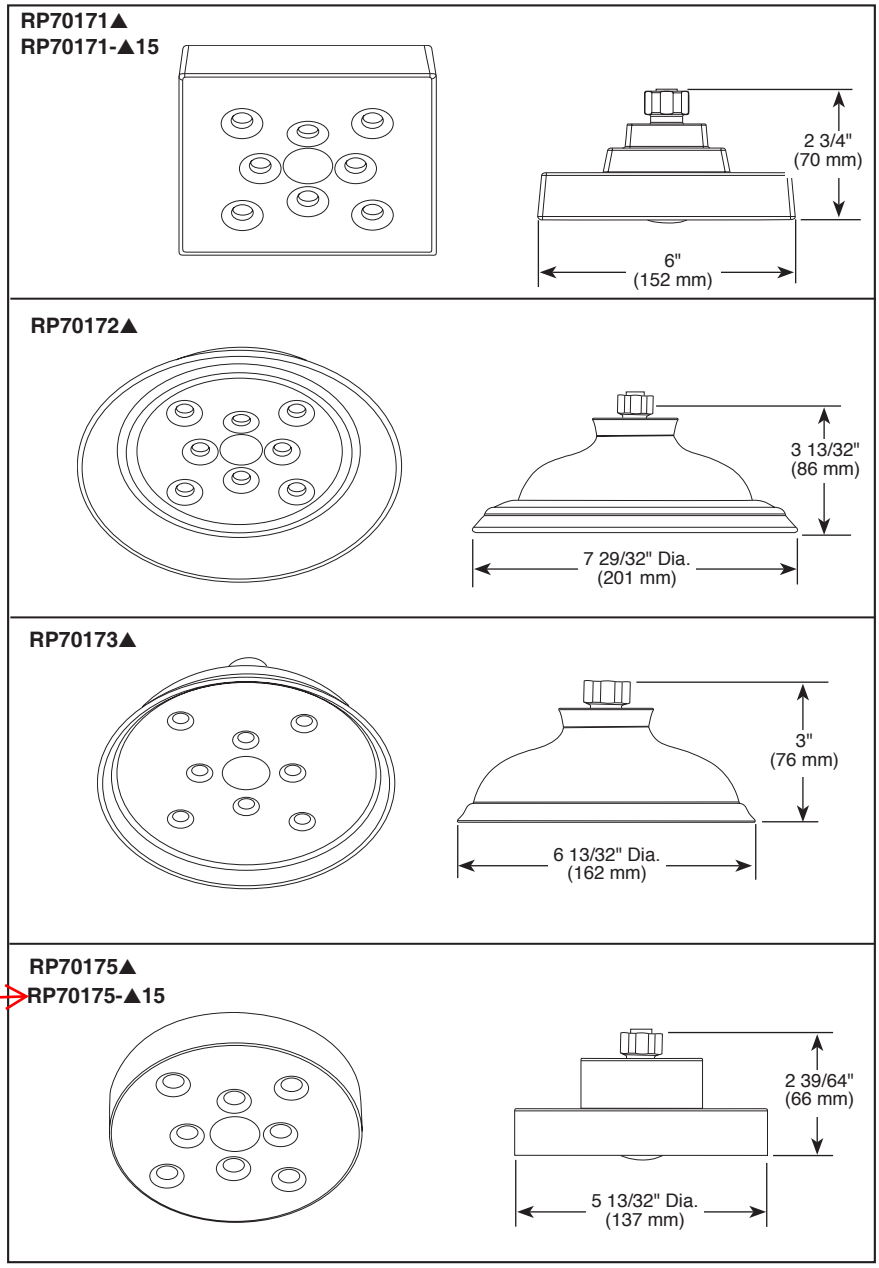

▲ Designate Proper Finish Suffix

STANDARD SPECIFICATIONS

- Full spray function.
- Standard 1/2" pipe itting.
- Maximum 2.0 gpm @ 80 psi, 7.6 L/min @ 550 kPa. (RP70171▲,RP70172▲,RP70173▲ & RP70175▲).
- Maximum 1.5 gpm @ 80 psi, 5.7 L/min @ 550 kPa. (RP70171-▲15 & RP70175-▲15).

WARRANTY

- Lifetime limited warranty on parts (other than electronic parts and batteries) and finishes: or, for commercial users, for 5 years from date of purchase.
- 5 year limited warranty on electronic parts (other than batteries); or, for commercial users, for 1 year from the date of purchase. No warranty is provided on batteries.

Spray Patterns

Full Spray

COMPLIES WITH:

- ASME A112.18.1 / CSA B125.1
- EPA WaterSense®

Delta reserves the right (1) to make changes in specifications and materials, and (2) to change or discontinue models, both without notice or obligation. Dimensions are for reference only. See current full-line price book or www.deltafaucet.com for finish options and product availability.

DSP-B-RP70172 Rev. C

DELTA FAUCET COMPANY

55 E. 111th Street, Indianapolis, Indiana 46280
350 South Edgeware Road, St. Thomas, ON N5P 4L1
© 2015 Masco Corporation of Indiana

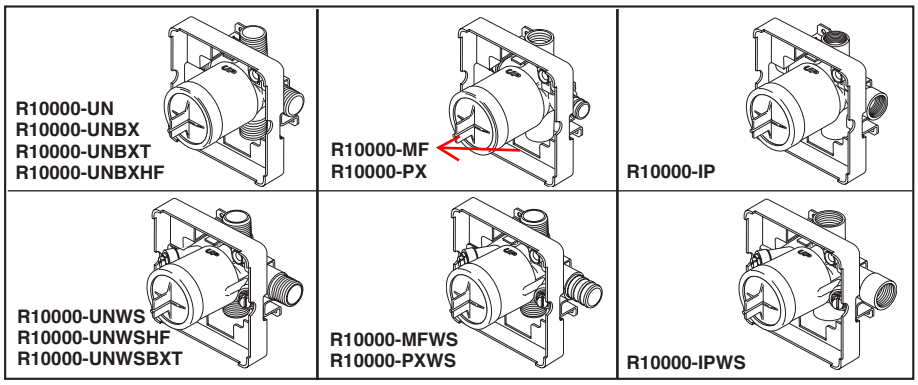

Submitted Model No.:_____

Specific Features:_____

R10000-UN
R10000-UNBX
R10000-UNBXT

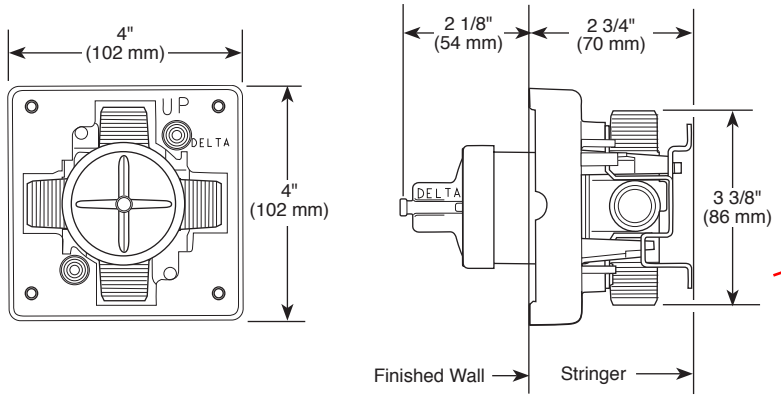

R10000-UNWS

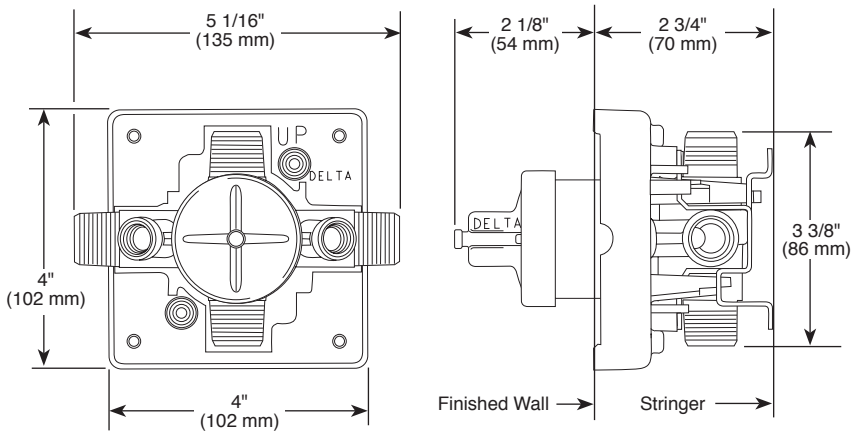

RP75136 Available Extension Kit

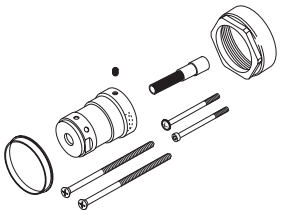

Delta reserves the right (1) to make changes in specifications and materials, and (2) to change or discontinue models, both without notice or obligation. Dimensions are for reference only. See current full-line price book or www.deltafaucet.com for finish options and product availability.

DSP-B-R10000 Rev. I

MULTICHOICE® UNIVERSAL ROUGH VALVE BODY

- R10000-UN (Universal Inlets/Outlets)
- R10000-UNBX (Universal Single Box Model)
- R10000-UNBXHF (High Flow Shower Only)
- R10000-UNBXT (Thin Wall)
- R10000-UNWS (Universal with Stops)
- R10000-UNWSHF (High Flow with Stops)
- R10000-UNWSBXT (Thin Wall with Stops)
- R10000-PX (Pex Crimp Connections with UN Outlets)
- R10000-PXWS (Pex Crimp Connections with Stop with UN Outlets)
- R10000-IP (IPS Inlets/Outlets)
- R10000-IPWS (IPS with Stops)
- R10000-MF (Pex Cold Expansion Connections with UN Outlets)
- R10000-MFWS (Pex Cold Expansion with Stops with UN Outlets)

STANDARD SPECIFICATIONS:

- Forged brass body.
- Back-to-Back installation capabilities.
- Can be tested with air (200 PSI) or water (300 PSI) without valve using supplied test cap.
- Square plasterguard allows for right angle cuts.
- Thin wall mounting.
- For use with MultiChoice® Universal single or dual function trim. Cartridge ships with trim.
- 1/2" outlets and connections.

Note: No tub outlet in HF model.

Note: Should use proper fitting with each type (copper tubing, iron pipe, and pex fitting).

Note: Should use proper tooling with crimping pex fitting and cold expansion pex models.

Note: IP indicates female 1/2" threaded connections.

Note: UN indicates Universal type fitting and is 1/2" NPT male thread with 1/2" C.W.T. female sweat.

WARRANTY

- Lifetime limited warranty on parts (other than electronic parts and batteries) and finishes: or, for commercial users, for 5 years from date of purchase.
- 5 year limited warranty on electronic parts (other than batteries); or, for commercial users, for 1 year from the date of purchase. No warranty is provided on batteries.

COMPLIES WITH:

- ASME A112.18.1 / CSA B125.1

DELTA FAUCET COMPANY
55 E. 111th Street, Indianapolis, Indiana 46280
350 South Edgeware Road, St. Thomas, ON N5P 4L1
© 2015 Masco Corporation of Indiana